Instruction Manual
Gas Refrigerator

Models

XCD-100 (LPG only)

XCD-100D three way fridge

XCD-185 two way fridge

XCD-280 two way fridge

Warning:

FOR YOUR SAFETY
Do not store or use gasoline or other flammable vapors and liquids in the vicinity of this or any other appliance.

If you smell gas:
1. Evacuate enclosure.
2. Call for professional help.

Read this manual carefully and be thoroughly acquainted with its contents before operating this refrigerator

TABLE OF CONTENTS **PAGE**

INTRODUCTION

Thank you for purchasing our gas refrigerator. This unit is designed to improve your living and entertaining comfort. The absorption system is totally silent that uses no compressors or fans. The refrigerator is ideal for installation in homes, farms, Cottages, chalets or similar. With its silent operation and unique design, you will enjoy the convenience and comfort for years to come.
Please read through these instructions carefully before operating this refrigerator. When using it, always exercise basic safety precautions.
This easy-to-use manual will guide you to getting the best use of this refrigerator.

This appliance is intended to be used in household and similar applications such as:
- staff kitchen areas in shops, offices and other working environments;
- farm houses and by clients in hotels, motels and other residential type environments;
- bed and breakfast type environments;
- catering and similar non-retail applications.

SAFETY INSTRUCTIONS

1. Do not allow children to play with the Refrigerator, even when it is turned off;
2. Do not use store liquids such gasoline ,kerosene,etc., inside your Refrigerator, thus avoiding the risks of explosions and fire;
3. Do not store toxic materials inside your Refrigerator, as they could contaminate food items;
4. Your Refrigerator should be used only by those who have read this manual or those that have been adequately instructed by someone who has read it.
5. This appliance is not intended for use by persons (including children) with reduced physical, sensory or mental capabilities, or lack of experience and knowledge, unless they have been given supervision or instruction concerning use of the appliance by a person responsible for their safety.
6. Children should be supervised to ensure that they do not play with the appliance.
7. If the supply cord is damaged, it must be replaced by the manufacturer or its service agent or a similarly qualified person in order to avoid a hazard.
8. These appliances use flammable insulation blowing gas, please dispose the appliance according to the local regulation.

TRANSIT DAMAGE

Inspect the refrigerator for damage. Transit damage must be reported to whoever is responsible for delivery not later than seven days after the refrigerator was delivered.

Power source requirements

Model XCD-100 is designed to operate on LPG only.
Model XCD-100D is a three way fridge designed to operate on LPG, 12v and 230v energy sources.
Model XCD-185 and XCD-280 are two way fridges designed to operate on LPG and 230v energy sources

LP Gas Operation	2.75 KPa
12 volts DC	control voltage (10.5 VDC min. to 15.4 VDC max) (3-way model only).
AC Operation	230V 50Hz

Operating in excess of these specifications can damage the refrigerator's electrical circuit, related components and voids the refrigerator's warranty.

REFERENCE INFORMATION

Please complete the following information for future reference. You will need it to obtain warranty service.

Model Name*: _____

Serial Number *: _____

Date of Purchase: _____

Place of Purchase: _____

*The above information is written on the nameplate inside the cabinet. Retain this user manual with your sales receipt as a permanent record of your purchase.

The manufacturer reserves the right to make changes to its products when considered necessary and useful, without affecting the essential safety and operating characteristics. We are therefore not responsible for any inaccuracies due to printing, transcription, or conversational errors, whether contained in any printed source, or relayed in person.

IMPORTANT SAFETY PRECAUTIONS

- **Before you use your absorption refrigerator, please read this instruction manual carefully**.
- NEVER install gas appliances in unventilated (air tight) structures or sleeping rooms. Gas refrigerators consume air (oxygen) when operated on gas power. When used in any inside area, provide a fresh air opening of at least 3 square inches (20mm). Please note that an exterior flue is not required with "vent-less" propane appliances like gas refrigerators, but you may choose to run an insulated 2 inch (min) inside diameter vent pipe through the roof (straight up is best) or the wall (avoid 90 degree bends with 45's spaced more than two feet apart). It is recommended that a carbon monoxide detector be installed in the same room as the gas refrigerator.
- **NEVER** install a gas appliance on carpeting or against a flammable wall.
- **NEVER** leave your gas appliances running unattended while on vacation.
- **NEVER** run the electrical power and gas power at the same time. Backup electrical power 230 volt AC operation is STANDARD equipment on the gas fridge. Should you ever run out of gas, it's very handy. Just be certain to never run both heaters at the same time. Serious damage will result to the cooling unit if you do.
- **Never unplug you absorption refrigerator by pulling on the power cord. Always grasp the plug firmly and pull straight out from the wall outlet.**
- Repair or replace immediately, all electric service cords that have become frayed or otherwise damaged. Do not use a cord that shows cracks or abrasion damage along its length, the plug or the connector end.
- Unplug your absorption refrigerator before cleaning or before making any repairs.
- The power supply must be properly grounded.
- Use this appliance only for its intended purpose as described in this user manual.
- This absorption refrigerator must be properly installed in accordance with the installation instructions before it is used.
- **Cut off the gas supply before cleaning or before making any repairs.**
- ***NOTE: If for any reason this product requires service, we strongly recommend that a certified technician perform the service.***
- Do not operate your absorption refrigerator in the presence of explosive fumes.

- Do not use the unit in the immediate surroundings of a bath, shower or swimming pool.
- Before discarding or storing, we recommend that you remove the door and leave the shelves in place. This will reduce the possibility of danger to children.
- The sealed cooling system must not be opened, since it contains corroding chemicals under high pressure.
- Check that the gas supplied to the refrigerator is at the correct pressure. See the pressure regulator on the LP gas tank.

- **Do not store explosive substances such as aerosol cans with flammable propellant in this appliance.**
- ***Do not use an adapter plug or extension cord.***
- ***Remove any transit protection before use.***
- ***This appliance is not intended for use by young children or infirm persons unless they have been adequately supervised by a responsible person to ensure that they can use the appliance safely.***
- ***If the supply cord is damaged, it must be replaced by the manufacturer, its service agent or similarly qualified persons in order to avoid a hazard.***

WARNING:

Electrical Grounding Instructions

This appliance is equipped with a three-prong (grounding) plug for your protection against shock hazards and should be plugged directly into a properly grounded three-prong receptacle. Do not cut or remove the grounding prong from this plug.

SAFE DISPOSAL

Contact your municipal department of public works to inquire about the procedures for collecting and disposing of refrigerated appliances in your area.

NOTE: Do not attempt to remove refrigerant or compressors yourself. Improperly handled refrigerant may result in physical harm. Only properly trained individuals using EPA-approved refrigerant recovery equipment should attempt to remove refrigerant from appliances.

PARTS AND FEATURES – Model XCD-100

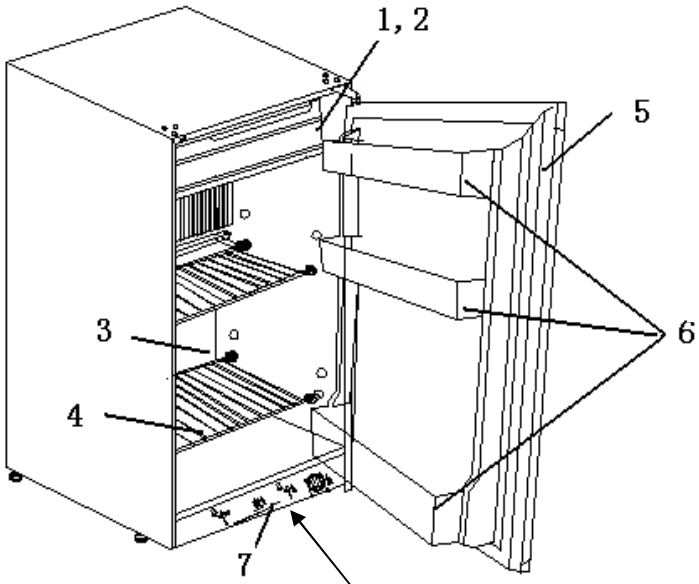

1. Freezer compartment
2. Freezer door
3. Fridge compartment
4. Fridge shelf
5. Fridge door
6. Door balcony
7. Control panel

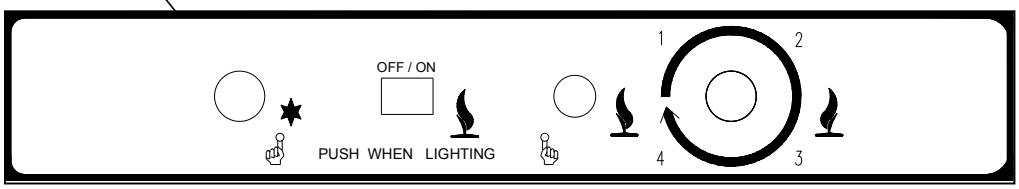

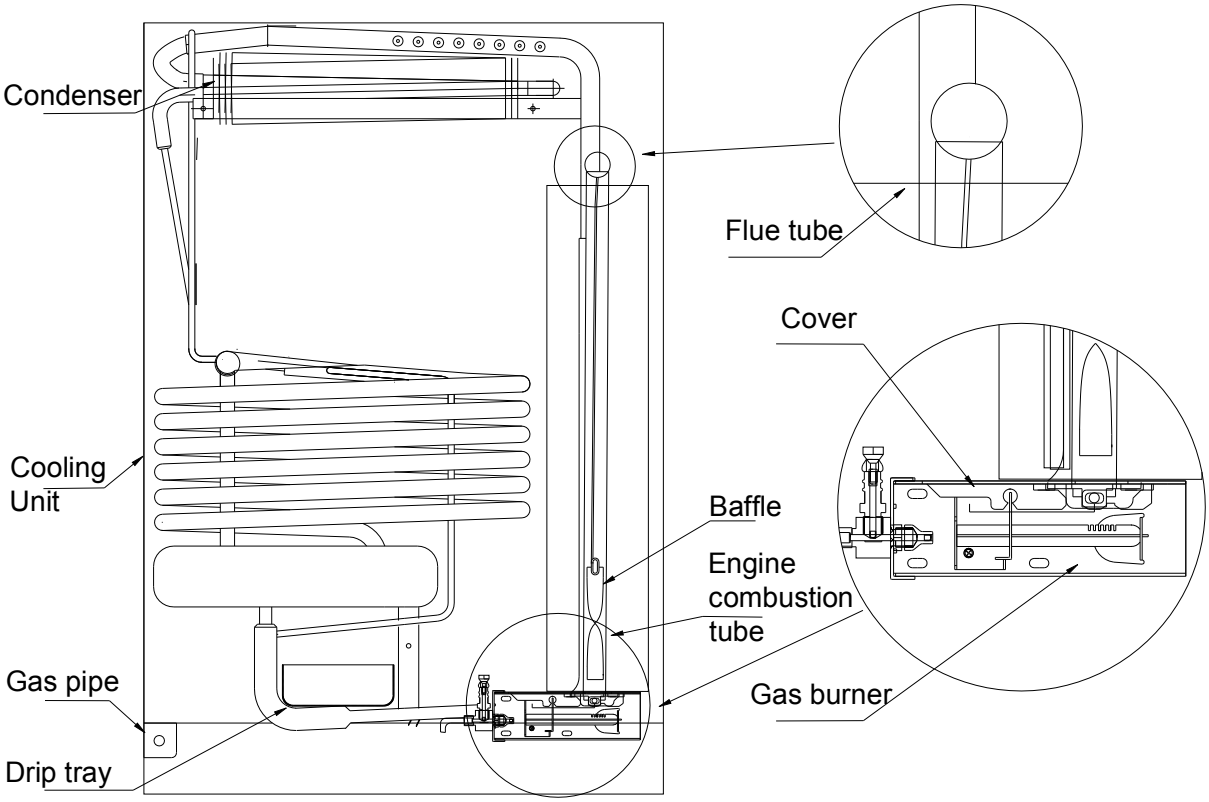

PARTS AND FEATURES – Model XCD-100D

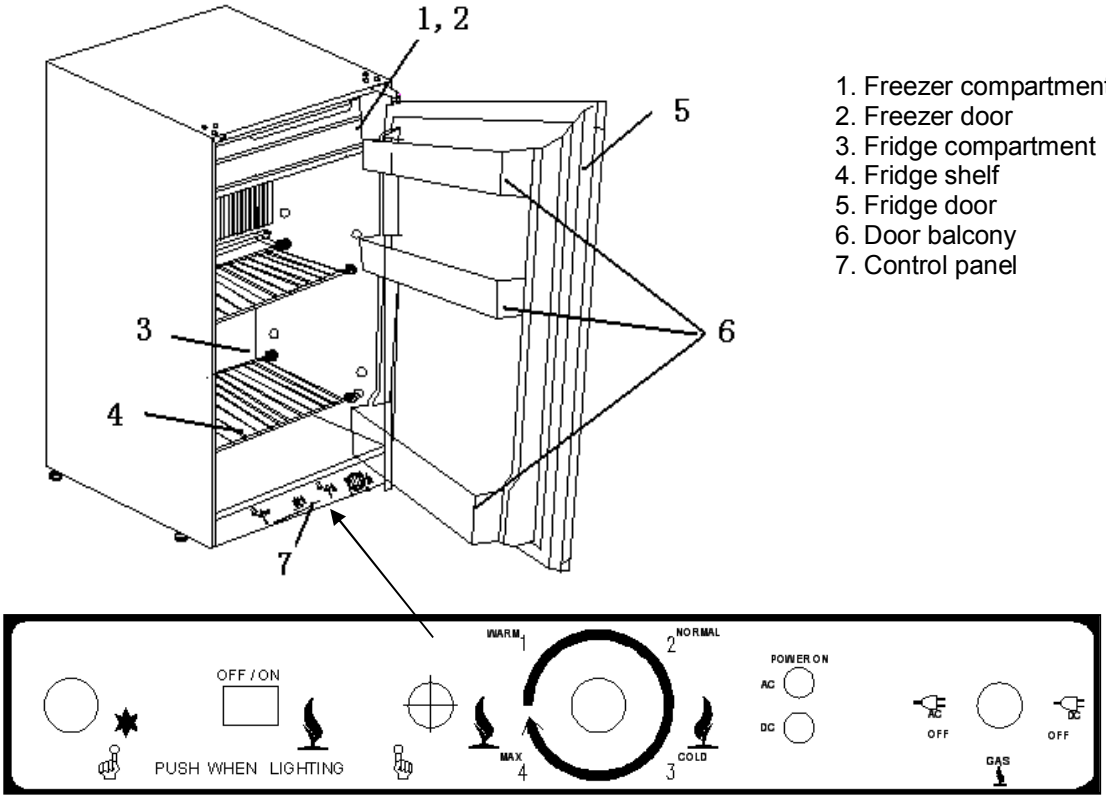

1. Freezer compartment
2. Freezer door
3. Fridge compartment
4. Fridge shelf
5. Fridge door
6. Door balcony
7. Control panel

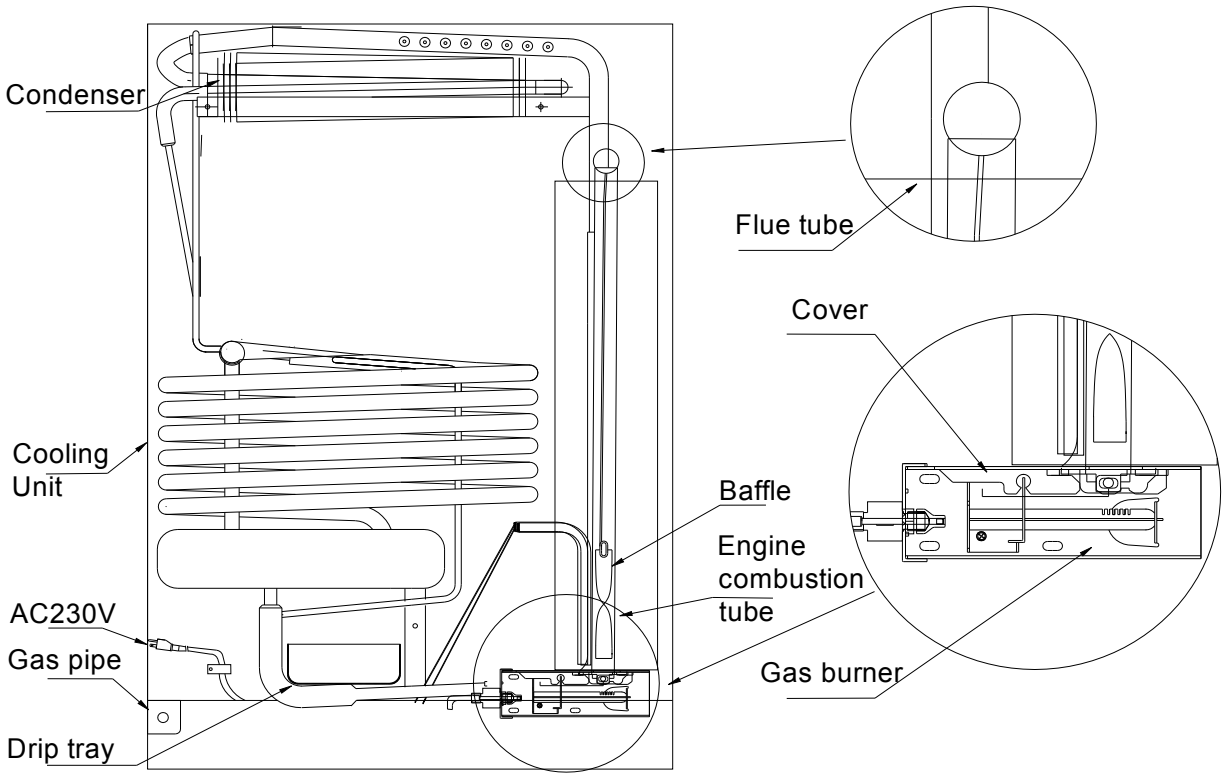

PARTS AND FEATURES – Model XCD-185 and XCD-280

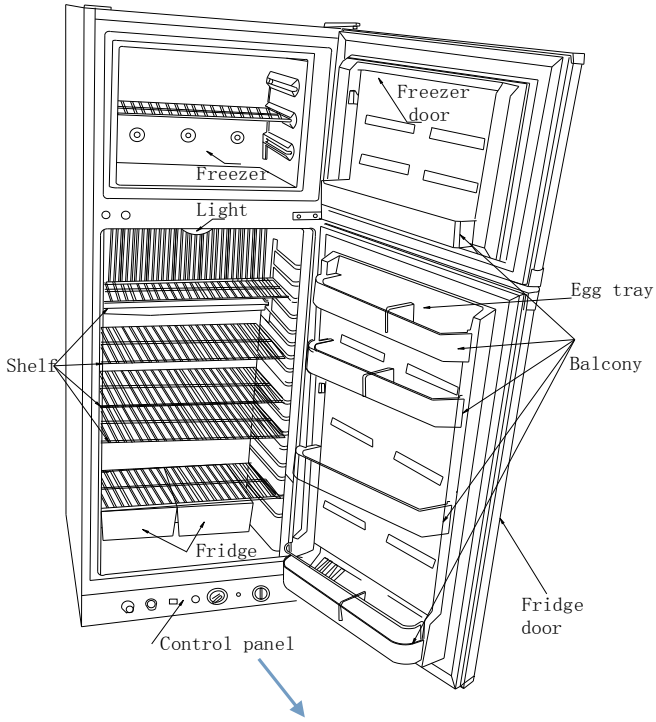

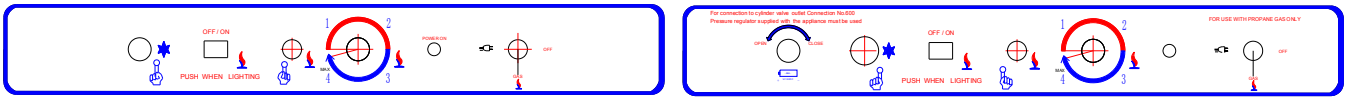

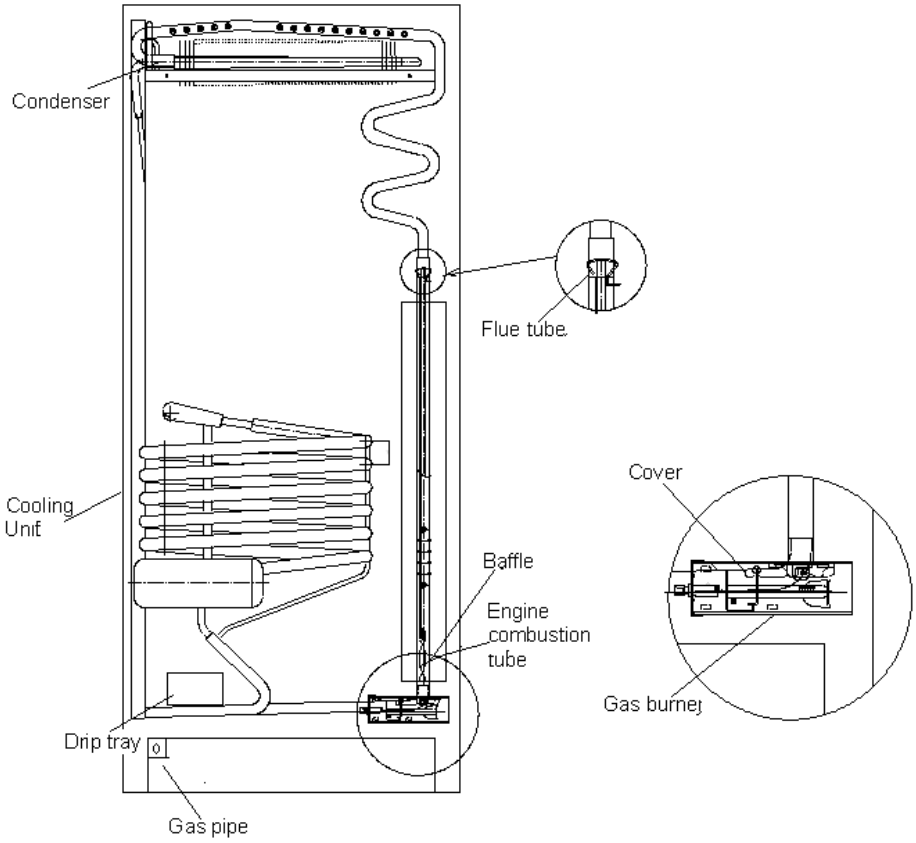

INSTALLATION INSTRUCTIONS

It is advisable to clean the inside of the absorption refrigerator with lukewarm water using a mild detergent, and then to dry it thoroughly prior to use.

LEVELLING AND VENTILATION

The refrigeration system of the cabinet is designed to operate with the cabinet located on a flat surface. Avoid tilting the cabinet side.
If the cabinet must be tilted on an angle for handling or moving purposes, allow it to sit in an upright position 20 to 30 minutes prior to plugging it in and starting the cooling of the storage compartment.
For electrical models - Grounding plug and socket should be provided in accordance with local regulations. The cable-size should meet the refrigerator's requirements. The unit must be connected to proper electrical network, which is shown on the nameplate, through an omnipoplar circuit-breaker. To assure the proper function of the refrigerator.

Please observe the following recommendations.

To ensure correct circulation, the unit should be kept 2.5 cm away from the rear wall and possible side walls.

The clearance above the refrigerator should be at least 100 mm.

Locate the unit away from direct sunlight. This will enable you to obtain the best performance and save energy.

Further the room should have a window (which can be opened) or a door to the outside.
It is important that the refrigerator is not subject to radiation of heat from a stove etc.

For best performance also at high ambient temperatures there must be a free air circulation over the cooling unit at the rear of the refrigerator.

The refrigerator is designed for a free-standing installation.

Ventilation must be in accordance with AS/NZS 5601 - *Gas Installations.* In general, the appliance should have adequate ventilation for complete combustion of gas, proper flueing and to maintain temperature of immediate surroundings within safe limits.

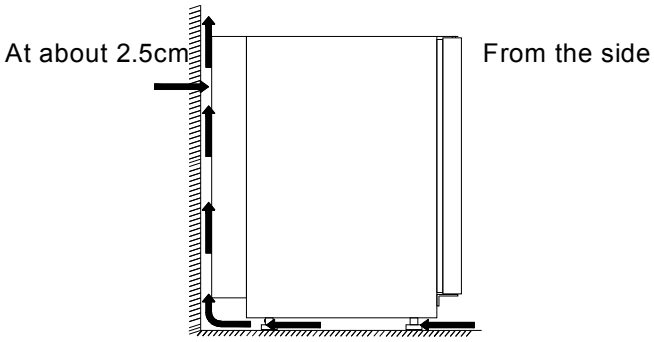

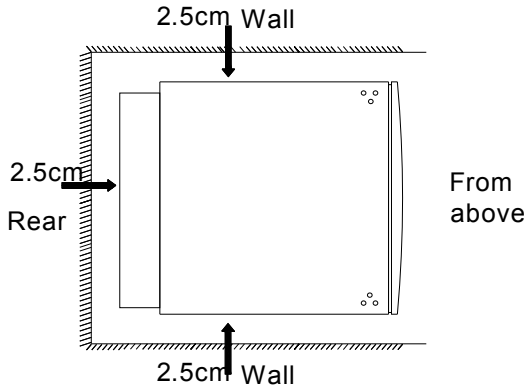

LP GAS CONNECTION

The refrigerator is designed for operation on LP gas, the pressure of which must be 2.75kPa for Propane Check that this is stated on the dataplate. The refrigerator is **NOT** designed for operation on town gas or natural gas.

CAUTION! CHECK THAT THE GAS SUPPLIED TO THE REFRIGERATOR IS AT THE PROPER PRESSURE. SEE THE PRESSURE REGULATOR ON THE LP GAS CONTAINER.

This appliance shall be installed only by authorised persons and in accordance with the manufacturer's installation instructions, local gas fitting regulations, municipal building codes, AS/NZS 5601 - *Gas Installations* and any other statutory regulations.

The gas supply pipe should be connected to the gas inlet of the gas control valve by means of a suitable threaded coupling.

In making the connection to the refrigerator, a union gas cock of an approved bottled-gas type must be incorporated in the supply line in a position which is readily accessible to the user. For eventual servicing purposes, the union should be on the outlet side of the cock and the pipework should be positioned so as not to prevent the refrigerator from being readily withdrawn.

AN APPROVED MANUAL SHUT-OFF VALVE MUST BE INSTALLED AT THE GAS INLET OF THE REFRIGERATOR. THE SHUT-OFF VALVE MUST BE ACCESSIBLE TO THE USER WHEN THE APPLIANCE IS IN THE INSTALLED POSITION.

BEFORE LEAVING –Check all connections for gas leaks with soap and water. **DO NOT** use a naked flame for detecting leaks. Ignite the burner to ensure correct operation of gas valve, burner and ignition. Turn gas tap to low flame position and observe stability of the flame. When satisfied, please instruct the user on the correct method of operation. In case the appliance fails to operate correctly after all checks have been carried out, refer to the authorised service provider in your area.

230V AC connection.

Check that the voltage stated on the data plate is the same as the mains voltage in use (230 V).
Plug the 230 V refrigerator power cord into an easily accessible earthed wall socket.
Electrical leads must be routed and secured so that they cannot come into contact with hot or sharp parts of the refrigerator.

12 V DC connection.

For 3 ways model, there is a terminal block in the rear bottom for 12VDC. You can ignore the positive and negative indication, simply connect the 12V DV power to the two terminals.

OPERATION INSTRUCTIONS – Model XCD-100

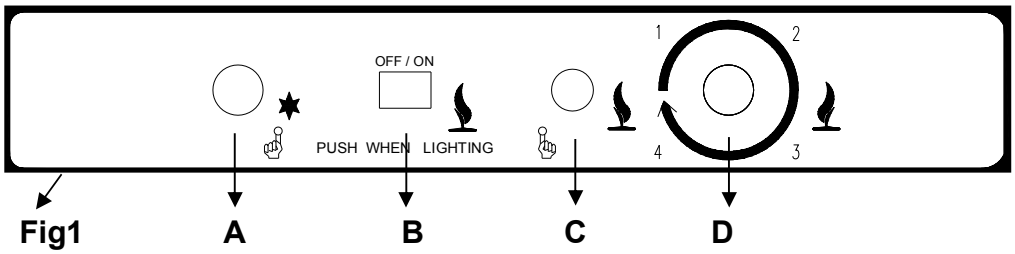

A: Piezo igniter
B: Flame indicator
C: Safety valve
D: Thermostat knob

After initial installation, servicing, or changing gas cylinders etc., the gas pipes may contain some air which should be allowed to escape by briefly turning on the refrigerator. This will ensure that the flame lights immediately.

1. Make sure that all valves between the gas container and the refrigerator are open.
2. Depress the safety device control (C) and hold it down while depressing the piezoelectric igniter button (A) repeatedly.
3. Check the flame indicator (B) to see whether the flame is alight.
4. Keep the safety device control (C) depressed for a further 10-15 seconds.
5. Release the safety device control (C) and again check to see that the flame is alight.

If the burner has not lit after 4-5 attempts, turn off the gas tap, wait 5 minutes and then try to re-light. If the burner still fails to light, please contact the authorised service provider in your area.

To terminate gas operation, turn off the gas valve from the gas container.

Regulating the temperature

The position number refers to fig. 1.
It will take several hours for the refrigerator to reach normal operating temperature.
The temperature of the main compartment of the refrigerator is controlled by a thermostat. The thermostat knob (D) should be set at 1-4. If a lower (colder) temperature is desired, set the thermostat to a higher figure. Please note that too much lower temperature might make vegetable or egg frozen..

Turning Off The Refrigerator

If the refrigerator is not to be used for some time:
1. Shut off any valve in the gas line to the refrigerator.
2. Empty the refrigerator. Defrost and clean it as described in the following paragraph. It must be completely dry inside to avoid mold growth (if possible have the door open).
3. Set the thermostat button to the minimum position;

OPERATION INSTRUCTIONS – Model XCD-100D

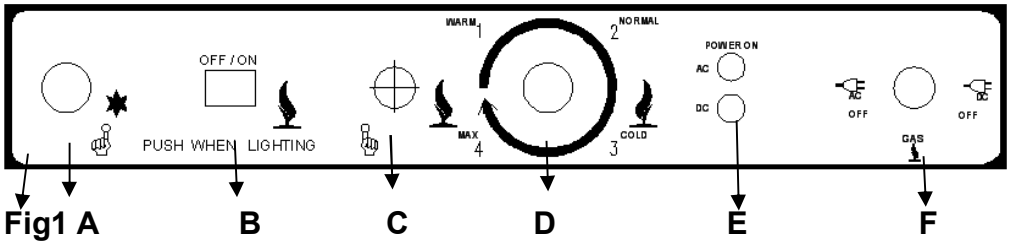

Fig1 A B C D E F

A: Piezo igniter
B: Flame indicator
C: Safety valve button
D: Thermostat knob
E: Power on lamp
F: Power switch

The refrigerator can be run on either 230 V or LP gas, or even 12VDC for some models. Changing between these modes of operation is carried out by means of control buttons positioned as shown in fig. 1.
The piezoelectric igniter discharges sparks over the burner when the button (A) is depressed.
In the flame indicator (B), you can see a blue light when the flame is alight.
The refrigerator is fitted with a safety device which automatically shuts off the supply of gas if the flame goes out. The safety device can be opened manually by depressing knob (C).
The refrigerator temperature is controlled by a thermostat (D). Please note that the thermostat has no "off" position.
The Gas/Power/DC12V rotary switch (F) can be set at either AC(=Electricity power AC Neon lamp is on , while LP gas is off), or OFF (=Electricity power is off , while LP is off.).,or GAS (=Electricity power is off , while LP gas needs to be connected.).or DC12V (=Electricity power DC Neon lamp is on, Electricity power AC Neon lamp is off , while LP gas is off).The AC Neon lamp Or DC Neon lamp (E) inside will light when the electric power is on.

LP Gas operation

After initial installation, servicing, or changing gas cylinders etc., the gas pipes may contain some air which should be allowed to escape by briefly turning on the refrigerator. This will ensure that the flame lights immediately.

1. Make sure that all valves between the gas container and the refrigerator are open.
2. Turn power switch to gas.
3. Depress the safety device control and hold it down while depressing the piezoelectric igniter button repeatedly.
4. Check the flame indicator to see whether the flame is alight.
5. Keep the safety device control depressed for a further 10-15 seconds.
6. Release the safety device control and again check to see that the flame is alight.

If the burner has not lit after 4-5 attempts, turn off the gas tap, wait 5 minutes and then try to re-light. If the burner still fails to light, please contact the authorised service provider in your area.

To terminate gas operation, turn the power switch to OFF, then turn off the gas valve from the gas container.

230 VAC Operation

Make sure that the gas valve is turned off.
Turn the power switch to AC mode.
Plug the power cord to the power socket. You will see that the green AC lamp is on.

12VDC Operation

If 230 VAC or LP gas is not available, the refrigerator can work with DC 12V (3-Way models only). Make sure that you turn the main power switch to “DC” position. Then you can connect the 12VDC power to the terminal block which is available in the rear bottom part of the refrigerator. You will see the red DC lamp is on.
DC operation is not as efficient as LP Gas or AC operation. DC electric should not be used to initially cool the refrigerator. Only use DC when the other modes are unavailable (for example; while in transit). When you start to use AC or gas supply, make sure that you disconnect the DC power input.

Regulating the temperature

It will take several hours for the refrigerator to reach normal operating temperature.
The temperature of the main compartment of the refrigerator is controlled by a thermostat. The thermostat knob should be set at 1-4. If a lower (colder) temperature is desired, set the thermostat to a higher figure. Please note that too much lower temperature might make vegetable or egg frozen.

Turning Off The Refrigerator

If the refrigerator is not to be used for some time:

1. Shut off any valve in the gas line to the refrigerator.
2. Turn the main power swich to “OFF”. Any of the two “OFF” is fine.
3. Empty the refrigerator. Defrost and clean it. It must be completely dry inside to avoid mold growth (if possible have the door open).
4. Set the thermostat button to the minimum position;

OPERATION INSTRUCTIONS – Model XCD-185 & XCD-280

（Battery ignition）

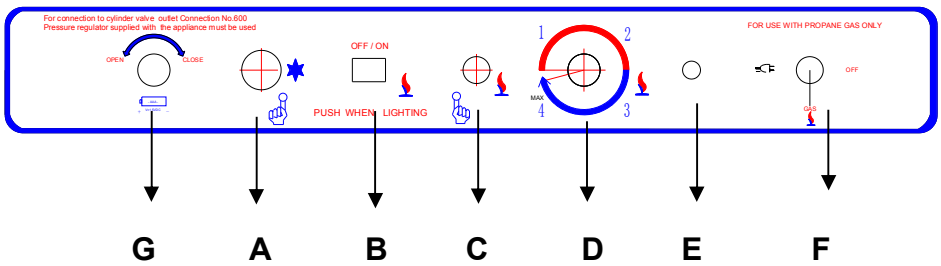

A: Battery igniter
B: Flame indicator
C: Safety valve button
D: Thermostat knob
E: AC lamp
F: Power switch
G: Battery cap

Fig1

The refrigerator can be run on either 230 V or LP gas. Changing between these modes of operation is carried out by turning the rotary switch F.
The refrigerator temperature is controlled by a thermostat (D). Please note that the thermostat has no "off" position.
The refrigerator is fitted with a safety device which automatically shuts off the supply of gas if the flame goes out. The safety device can be opened manually by depressing knob (C).
In the flame indicator (B), you can see a blue light when the flame is alight.
The Neon lamp (E) inside will light when the electric power is on.

GAS OPERATION

After initial installation, servicing, or changing gas cylinders etc., the gas pipes may contain some air which should be allowed to escape by depressing the button (C). This will ensure that the flame lights immediately.

1. Make sure that all valves between the gas container and the refrigerator are open.
2. Set the rotary switch (F) to gas.
3. Depress the safety device control (C) and hold it down while depressing the igniter switch (A) .
4. Check the flame indicator (B) to see whether the flame is alight.
5. Keep the safety device control (C) depressed for a further 10-15 seconds.
6. Release the safety device control (C) and again check to see that the flame is alight.

If the burner has not lit after 4-5 attempts, turn off the gas tap, wait 5 minutes and then try to re-light. If the burner still fails to light, please contact the authorised service provider in your area.

Note: If the battery ignition fails to spark, you might need to replace the battery.

AC OPERATION

1. Set the rotary switch (F) to AC.
2. Have the AC power plug to be connected to main power source.
3. Check if the lamp (E) is alight.

To terminate gas operation, turn off the gas valve from the gas container and turn the switch F to OFF position.

To terminate AC operation, turn the switch F to OFF position.

Regulating the temperature

The position number refers to fig. 1.
It will take several hours for the refrigerator to reach normal operating temperature.
The temperature of the main compartment of the refrigerator is controlled by a thermostat. The thermostat knob (D) should be set at 1-4. If a lower (colder) temperature is desired, set the thermostat to a higher figure. Please note that too much lower temperature might make vegetable or egg frozen..

Turning Off The Refrigerator

If the refrigerator is not to be used for some time:

1. Shut off any valve in the gas line to the refrigerator.
2. Empty the refrigerator. Defrost and clean it as described in the following paragraph. It must be completely dry inside to avoid mold growth (if possible have the door open).
3. Set the thermostat button to the minimum position;

RECOGNISING ABNORMAL OPERATION (LPG use)

Any of the following are considered to be abnormal operation and may require servicing:

- Yellow tipping of the burner flame.
- Burner not igniting properly.
- Burner failing to remain alight.
- Gas valves, which are difficult to turn.

In case the appliance fails to operate correctly, contact the authorised service provider in your area.

REVERSING THE DOOR (OPTION) – Models XCD-100 and XCD-100D

How to reverse the door

- Remove the lower hinge by loosening and removing the screws with screwdriver (2).
- Carefully lower the door and remove it.
- Remove the three screws from the left top hinge(1) position, take the plastic part off the hinge position.
- Remove the three screws from the right top hinge and take off the hinge, insert the plastic part, rivet the three screws thereafter.
- Take off the lower hinge and fix it to the opposite side.
- Take the door. Insert the lower hinge axle into the right bottom hole of the door.
- Fix the spare hinge to the left top position of the cabinet. Adjust the door, make it straight and in alignment with the cabinet.

Note: As the door gasket gets pressed-in during shipment, after reversing the door the gasket might have to be reset. This will be good for seal to avoid any air escaping. If there is a gap between the cabinet and the door gasket, set the gasket by gently pulling it out to seal the gap. If necessary, you are recommended also to use the hair drier to warm the gasket to get rid of the gap.

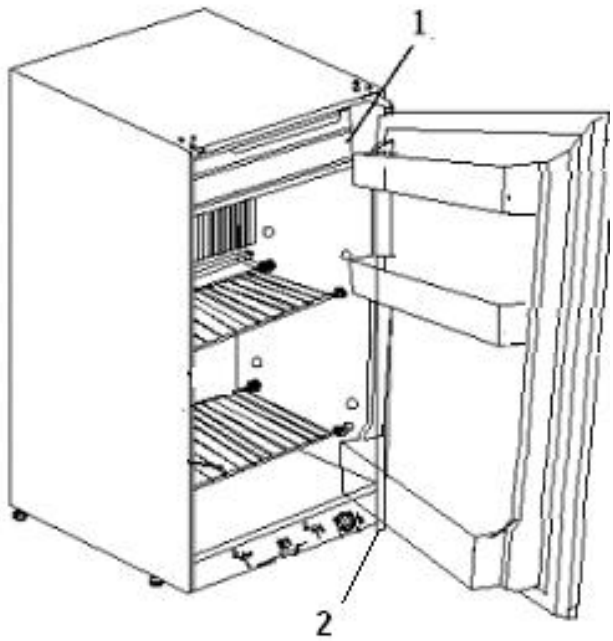

REVERSING THE DOOR (OPTION) - Models XCD-185 and XCD-280

How to reverse the door

- Remove the right three hinges by loosening and removing the screws with screwdriver.
- Carefully lower the doors and take them off the cabinet.
- Change the hinges to the left sides.
- Mount the top and bottom hinges first, then insert the two doors.
- Mount the middle hinges.

Note: As the door gasket gets pressed-in during shipment, after reversing the door the gasket might have to be reset. This will be good for seal to avoid any air escaping. If there is a gap between the cabinet and the door gasket, set the gasket by gently pulling it out to seal the gap. If necessary, you are recommended also to use the hair drier to warm the gasket to get rid of the gap.

Inside Lighting (Not available in every model)

The LED lamp works with four batteries,1.5volts each,AAA size.

Batteries are mounted on the back of the refrigerator. You need to replace the batteries periodically in case that the lamp is not bright enough.

FOOD STORAGE

The freezer compartment is not intended for quick freezing of foods. It keeps food frozen.
The fresh food compartment stores and cools food. For best cooling performance, air must circulate within the fresh food compartment. Do not cover the shelves with paper, plastic, etc.
To reduce frost on the cooling fins, cover liquids and moist foods. Do not place hot foods in the compartment, and do not leave the door open longer than needed.
The door storage areas hold items such as 2-liter bottles, half-gallon milk cartons, pop cans, ketchup bottles, and other commonly used items.
Allow the refrigerator to cool for 8 hours before loading foods. Loading a warm refrigerator with warm food increases the cool down period.
Never keep items in the refrigerator which might give off flammable gases.
Never put bottles or cans of fizzy drinks in the frozen food storage compartment as they may burst when freezing. Also don't give children ice lollies straight from the frozen food as they could cause frostbite. Most kinds of frozen food can be stored in the frozen food compartment for about a month. This period of time may vary, however, and it is important to follow the instructions on the individual packets.

ICE-MAKING

Fill the ice tray just below the brim with drinking water and place it on the freezer compartment.
It is possible to make ice faster by turning the control knob temporarily to its highest value but do not forget to turn it back to its regular setting afterwards as the refrigerator might otherwise become too cold.

DEFROSTING

Frost will gradually accumulate on the refrigerating surfaces. It must not be allowed to grow too thick as it acts as an insulation and adversely affects refrigerator performance.
Check the formation of frost regularly every week and when it gets about 3 mm thick, defrost the refrigerator.
To defrost the refrigerator, turn it off and remove the ice tray and all food items. **Warning**: normally the temperature of items of frozen foods would rise unduly during defrosting and so they should be consumed within 24 h or discarded.
Do not try to accelerate defrosting by using any kind of heating appliance, as this might damage the plastic surfaces of the refrigerator. Neither should any sharp objects be used to scrape off the ice.
The defrost water runs through the drainage pipe to a receptacle at the rear of the refrigerator where it evaporates.
Defrost water in the freezer compartment should be mopped up with a cloth.
When all ice has melted, wipe the refrigerator dry and restart it.
Place the food items back inside but wait until the refrigerator is cold before making ice cubes

CLEANING THE REFRIGERATOR

Warning: To avoid electric shock always unplug your absorption refrigerator before cleaning. Ignoring this warning may result in injury.

General: Do not use harsh chemicals, abrasives, ammonia, chlorine bleach, concentrated detergents, solvents or metal scouring pads. SOME of these chemicals may dissolve, damage and/or discolor your absorption refrigerator.

1) Remove the contents of the appliance
2) Wipe the inside and outside surfaces with a damp cloth. The addition of vinegar to the water is good for the prevention of mold and fungus.
3) Wipe all parts thoroughly after the cleaning.

The cooling unit behind the refrigerator should be cleaned with a brush from time to time, but make sure that the refrigerator is switched off when doing this.
The entire unit must be left for drying completely after cleaning with damp cloth

Cleaning the burner

Take off the protection hood and do the following:

1. Clean the openings and the burner screen with a toothbrush;
2. Clean and inspect the electrode and thermocouple. If either is corroded, have it changed. Check that they are well attached and if necessary tighten the screws;
3. Check that the spark is created by pressing the electric piezo igniter button on the control panel.
4. Do not use thin objects to either clean or unblock the injector

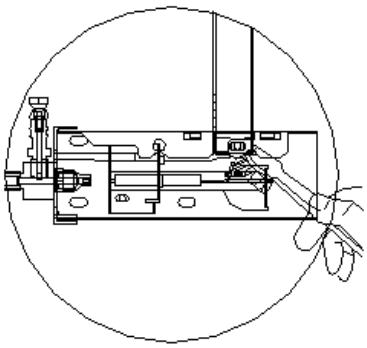

Cleaning the Cooling System Flue

WARNING Carbon Monoxide can be hazardous to your health. Gas appliances may emit excessive Carbon Monoxide if the refrigerator's burner, burner orifice, and the flue tube are not regularly cleaned. To prevent Carbon Monoxide, the burner, burner orifice, and the cooling system's flue tube must be cleaned at least once a year and after all prolonged (seasonal) shut-down periods. Refer to the following cleaning procedures, or contact a qualified installer, your dealer.

Before cleaning, Put a cloth on the burner to protect it from dirt;
1. Remove the refrigerator from its enclosure.
2. Remove the heat deflector cap from the flue.
3. Remove the spiral flue baffle from the flue tube.
4. Using a stiff brush or fine emery cloth, clean the spiral flue baffle of debris.
5. Clean the inside of the flue tube with a flue brush. Inspect burner after cleaning.
6. Re-install the spiral flue baffle. Insure the spiral flue baffle is securely in place. The spiral flue baffle is required for efficient cooling while operating in the gas mode.

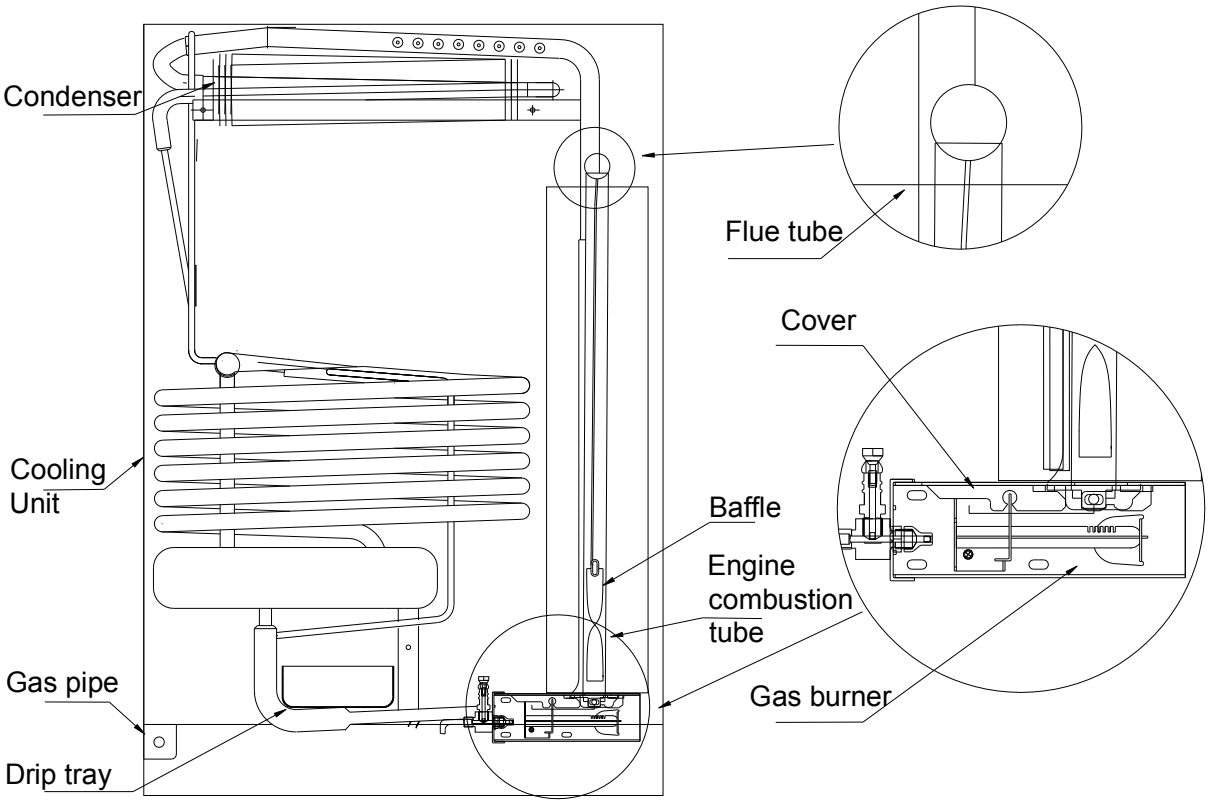

TROUBLE SHOOTING AND MAINTENANCE

If the refrigerator fails to work, check the following points before calling a service technician:
1. That the above installation and operating instructions have been followed.
2. The refrigerator is level.
3. If it is possible to start the refrigerator on any of the connected sources of energy.
4. If the refrigerator fails to work on gas, check:
   - That the gas bottle is not empty.
   - That all LP-gas valves are open.
5. If the refrigerator fails to work on 230 V, check:
   - That the 230 V supply is connected to the refrigerator.
   - That the fuse is intact.

If the refrigerator is not cold enough it may be because:
The ventilation of the cooling unit is inadequate.
The thermostat is set on the high temperature position.
The doors are opened frequently, or the gasket is not sealed properly.
Too much food at one time.
The gas pressure is incorrect - check the pressure regulator at the gas container.
If the refrigerator still does not work properly, call a service technician.

The sealed cooling system must not be opened, since it contains corroding chemicals under high pressure.

MAINTENANCE

Inspect the gas hose periodically for cracks or deep chafing marks. Connections can be tested for leaks using a soap solution.

WARNING: Do not use flame to check for leakage in the gas tubes.

DO NOT USE AN OPEN FLAME!
If there is any suspicion of damage, call for a service technician.
We recommend that a service technician check the refrigerator once a year

REPLACING THE LAMP (WHERE FITTED)
If the LED lamp inside the fridge has stopped working, first try replacing the batteries at the rear of the fridge with new AA 1.5V batteries. If the lamp still does not work, you will need to contact DP Refrigeration on (03) 9437 0737 to arrange a new lamp assembly. Use a flat headed screwdriver to remove the cover on the lamp, unclip the PCB and let the wires drop down. Detach the spade connectors, reattach the new LED lamp assembly, clip PCB and cover back into place.

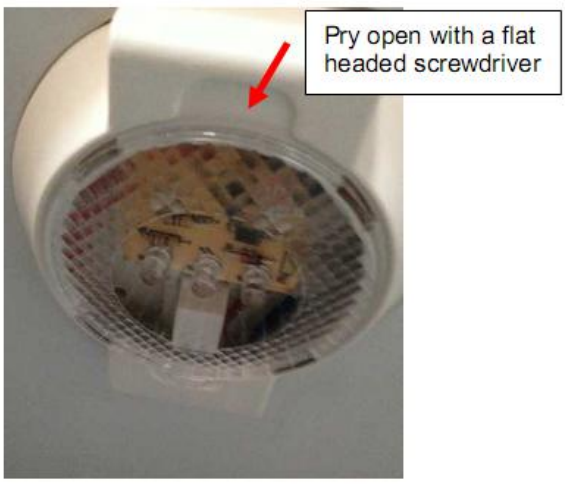

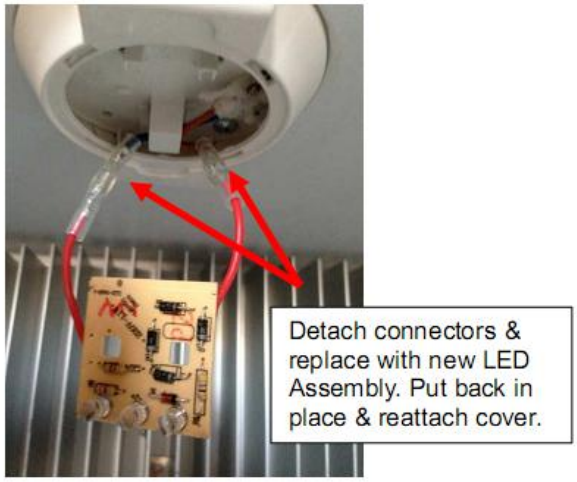

.

LIMITED WARRANTY

As a condition to any warranty service obligation, the consumer must present the Warranty Certificate along with a copy of the original purchase invoice.

THIS WARRANTY DOES NOT COVER:

1) Damage, accidental or otherwise, to the absorption refrigerator while in the possession of a consumer not caused by a defect in material or workmanship.
2) Damage caused by consumer misuse, tampering, or failure to follow the care and special handling provisions in the instructions.
3) Damage to the finish of the case, or other appearance parts caused by wear
4) Damage caused by repairs or alterations of the absorption refrigerator by anyone other than those authorized by the manufacturer.
5) Freight and Insurance cost for the warranty service

ALL WARRANTIES, INCLUDING ANY IMPLIED WARRANTY OF MERCHANT ABILITY ARE LIMITED TO CLAIMED DURATION. THE MANUFACTURER DISCLAIMS ANY LIABILITY FOR CONSEQUENTIAL OR INCIDENTAL DAMAGES

TECHNICAL DATA – Model XCD-100

Model	**XCD-100**
Dimensions without packing	(mm)
Height(including leveling feet)	790
Width	512
Depth	600
Depth(with the door open 90°)	1055
Weight (Net)	34kg
Location of Gas Inlet	On left hand side looking from rear. 73mm from bottom edge, 40mm from left side.
Capacity	(liters)
Total	95
Refrigerator	85
Freezer	10
Gas Type	Propane
Inlet pressure	2.75 kPa
Total Nominal Gas consumption	1.1 MJ/h
Injector Orifice Size	Ø0.30mm
Class	T
Total Mass of Refrigerant	R717 – 145g
Insulation Blowing Gas	Cyclopentane
Packing dimensions(H / W / D)	845*570*630(mm)

TECHNICAL DATA – Model XCD-100D

Model	**XCD-100D**
Dimensions without packing	(mm)
Height(including leveling feet)	790
Width	512
Depth	600
Depth(with the door open 90°)	1040
Weight (Net)	34kg
Location of Gas Inlet	On left hand side looking from rear. 73mm from bottom edge, 40mm from left side.
Capacity	(liters)
Total	95
Refrigerator	85
Freezer	10
Gas Type	Propane
Inlet pressure	2.75kPa
Voltage	AC230V / DC12V
Input power	AC 150W / DC 150W
Energy consumption net / 24 hours	1.8KWh
Total Nominal Gas consumption	1.1 MJ/h
Injector Orifice Size	Ø0.30mm
Class	T
Total Mass of Refrigerant	R717 – 145g
Insulation Blowing Gas	Cyclopentane
Packing dimensions(H / W / D)	845*570*630(mm)

TECHNICAL DATA – Model XCD-185

Model	**XCD-185**
Dimensions without packing	(mm)
Height(including leveling feet)	1460
Width	600
Depth	640
Depth(with the door open 90°)	1194
Weight	72kg
Location of Gas Inlet	On left hand side looking from rear. 79mm from bottom edge, 57mm from left side.
Capacity	(liters)
Total	174
Refrigerator	128
Freezer	46
Gas Type	Propane
Inlet pressure	2.75kPa
Test Point pressure	2.75kPa
Voltage	AC230V
Input power	AC 300W
Energy consumption net / 24 hours	4.2KWh
Total Nominal Gas consumption	1.80 MJ/h
Injector Orifice Size	Ø0.38mm
Class	T
Total Mass of Refrigerant	R717 – 255g
Insulation Blowing Gas	Cyclopentane
Packing dimensions(H / W / D)	1510*650*700(mm)

TECHNICAL DATA – Model XCD-280

Model	**XCD-280**
Dimensions without packing	(mm)
Height(including leveling feet)	1630
Width	600
Depth	730
Depth(with the door open 90°)	1284
Weight	85kg
Location of Gas Inlet	On left hand side looking from rear. 79mm from bottom edge, 57mm from left side.
Capacity	(liters)
Total	265
Refrigerator	206
Freezer	59
Gas Type	Propane
Propane pressure	2.75kPa
Test Point pressure	2.75kPa
Voltage	AC230V
Input power	AC 300W
Energy consumption net / 24 hours	4.2KWh
Total Nominal Gas consumption	1.80 MJ/h
Injector Orifice Size	Ø0.38mm
Class	T
Total Mass of Refrigerant	R717 – 300g
Insulation Blowing Gas	Cyclopentane
Packing dimensions(H / W / D)	1670*650*790(mm)

SERVICE AND SPARE PARTS

For service and spare parts for your refrigerator, contact:

DP Refrigeration Pty Ltd
Phone - (03) 9437 0737
Fax – (03) 9437 1570